CO 500/22

Company	WDA Pompen BV	Customer		Date	6-12-2017
Contact	Werner Damsté	Contact		List price	On req.
Project		Phone number		Family code	
Project no.		Email		Item no.	107350160

Performance according to ISO 9906 - Annex A

Power datas referced to:

Water, pure [100%] ; 4°C; 1000kg/m³; 1,57mm²/s

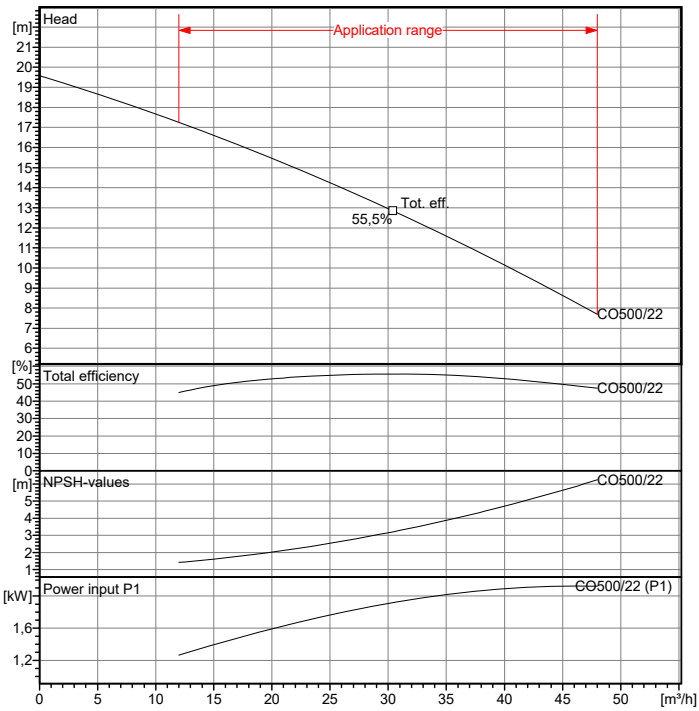

Operating Data Specification

Flow	0 m³/h
Head	0 m

Hydraulic data (duty point)

Flow	
Head	
Power input	
MEI >=0,4	

Pump data

Make	Lowara
Type	CO 500/22
Open impeller centrifugal pump with threaded connections	
Speed	2900
Head H(Q=0)	19,6 m
Suction side	
Discharge side	
Types of installation	Monobloc
Weight	23 kg

Materials / seals

Pump body	Stainless steel
impeller	Stainless steel
Seal casing	Stainless steel
Shaft extension	Stainless steel

Shaft Seal

Rotating Assembly	V-Ceramic
Fixed Assembly	B-Resin impregnated carbon
Elastomers	V-FKM (FPM)
Springs	G-AISI 316
Other Components	G-AISI 316

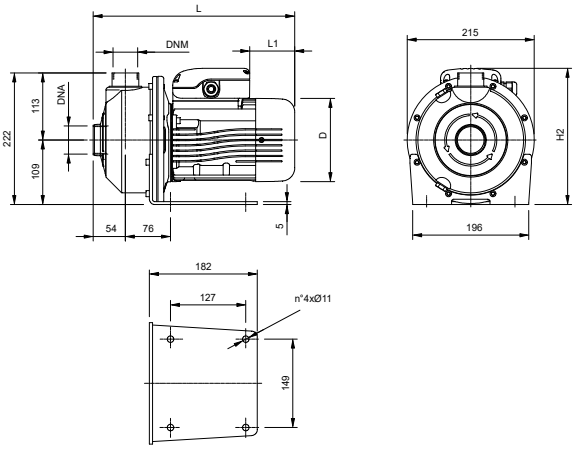

Motor data

Rated power P2	2,2 kW	Nom. Speed	2880 1/min
Frequency	50	Phase	3~
Rated voltage	220 V	Rated current	7,97 A
Protection class	IP 55	Insulation class	F

Permitted voltage tolerance +/- 10%

Dimensions mm

D	174		
DNA	Rp2		
DNM	Rp1?		
H2	245		
L	429		
L1	172		

Note: