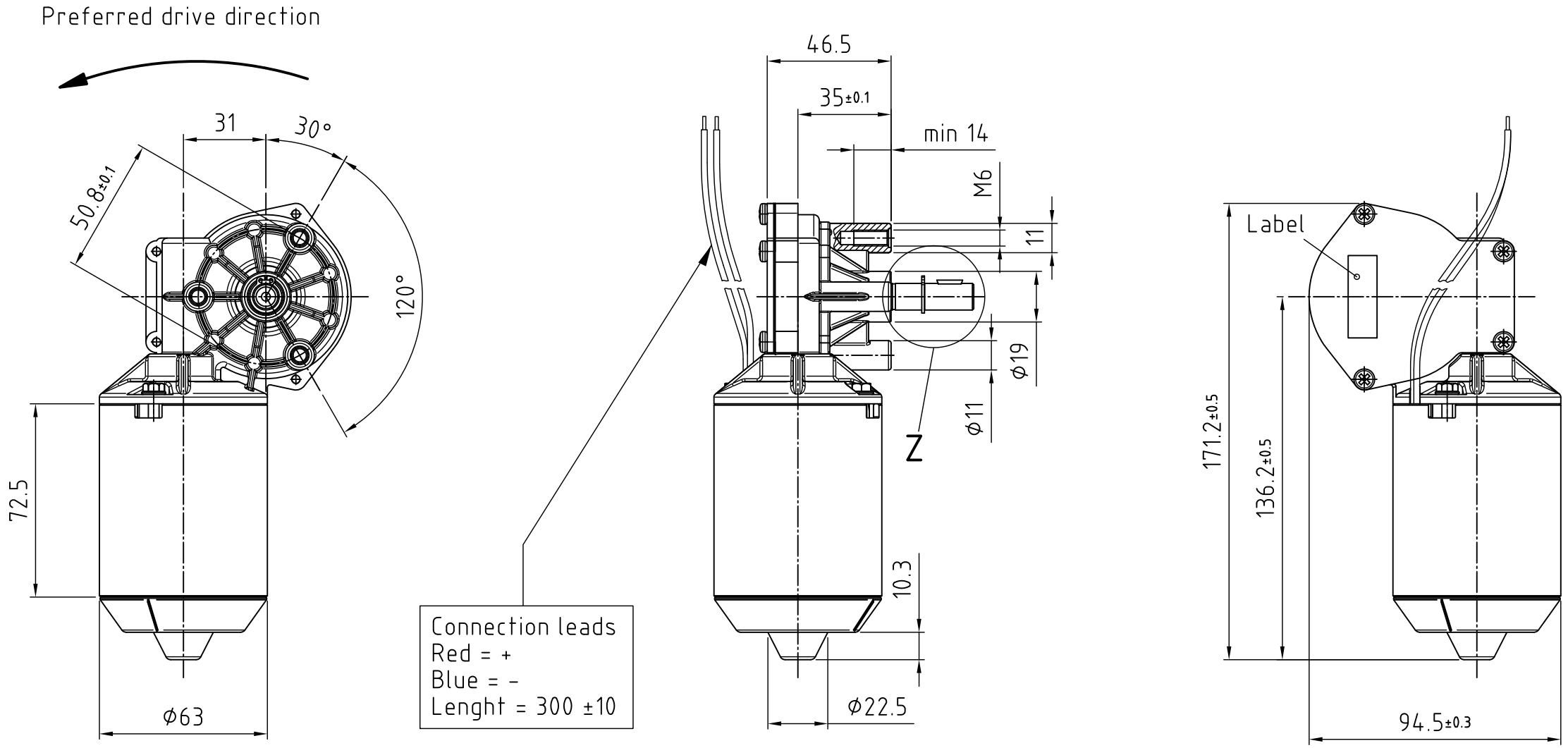

Code	100.656 / FC
Nominal tension	24 V DC
Nominal torque	6 Nm
Nominal power	5 W
No load speed	13 min^{-1}
Starting torque	14 Nm
Protection class	IP 30
Insulation class	F
Weight	~1.1 Kg

Attention: not drawn to scale!

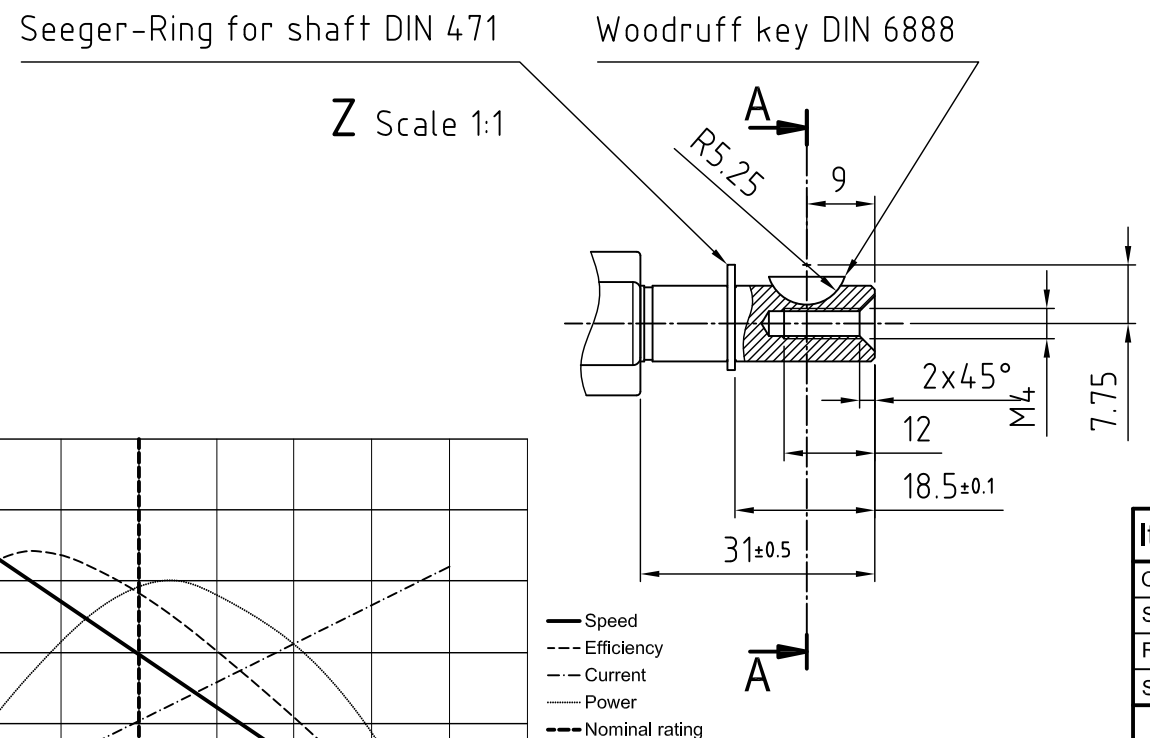

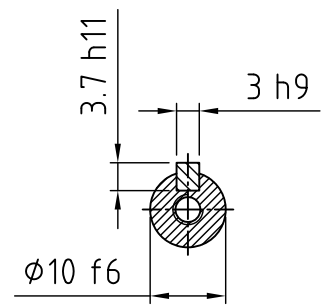

A-A Scale 1:1

Label

www.angst-pfister.com
Code ..... / ..
24V week ....

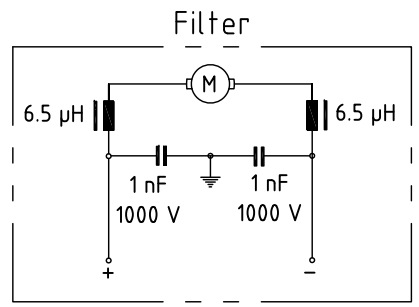

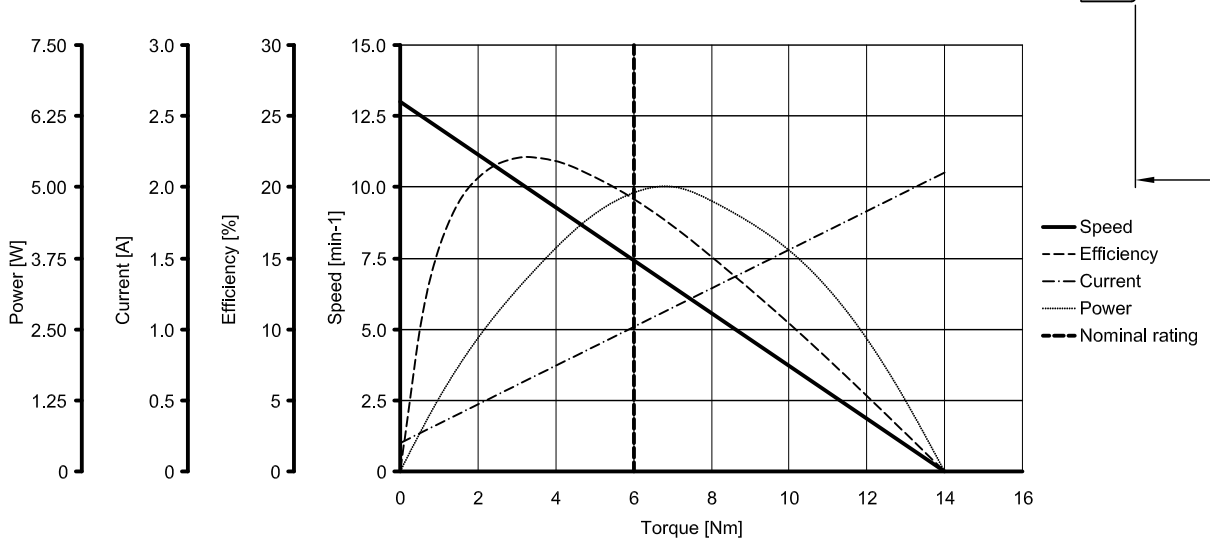

Item	Quantity	Description	Material		Remarks		
Origin			Established				Scale
Substitute of			Approved				
Replaced by			Amendment				
Separate part list							

For this document and the therein represented items we reserve all rights. Without our explicit consent the reproduction, the disclosure to third party or the utilisation of its content is prohibited.

© Copyright by Angst + Pfister 2014

Division

Format A3

Number of sheets 1

Sheet 1

CAD

Angst+Pfister

www.angst-pfister.com